Product datasheet

Specifications

Green Premium™

Illuminated monolithic push button, Harmony XB6E, square blue pushbutton Ø 16 flush to release 12 VDCpolarised1CO

XB6ECF6J1P

Discontinued

Discontinued on: 1 Jul 2020

Main

Range Of Product	Harmony XB6E
Product Or Component Type	Illuminated monolithic push-button
Device Short Name	XB6E
Bezel Material	Plastic
Mounting Diameter	16 mm
Sale Per Indivisible Quantity	5
Shape Of Signaling Unit Head	Square
Type Of Operator	latching
Operator Profile	Blue flush
Contacts Type And Composition	1 C/O
Contact Operation	Snap action
Connections - Terminals	Faston connectors, connection size: 2.8 x 0.5 mm Soldered connectors
Contacts Material	Gold-flashed silver
Light Source	Integral LED
[Us] Rated Supply Voltage	12 V DC polarised

Complementary

Height	18 mm
Width	18 mm
Depth	40 mm
Terminals Description Iso N°1	(13-14-11-12)OF
Net Weight	0.006 kg
Overvoltage Category	II conforming to IEC 60536
Operating Position	Any position
Marking	CE
Operating Force	1.3 N C/O changing electrical state
Mechanical Durability	250000 cycles
Short-Circuit Protection	3 A cartridge fuse type gG
[Ith] Conventional Free Air Thermal Current	3 A

Disclaimer: This documentation is not intended as a substitute for and is not to be used for determining suitability or reliability of these products for specific user applications

[Ui] Rated Insulation Voltage	250 V (pollution degree 2) conforming to IEC 60947-1
[Uimp] Rated Impulse Withstand Voltage	2.5 kV conforming to IEC 60947-1
Electrical Durability	50000 cycles, DC-12, 1 A at 30 V conforming to IEC 60947-5-1 appendix C 50000 cycles, AC-12, 0.5 A at 125 V conforming to IEC 60947-5-1 appendix C 50000 cycles, AC-12, 0.5 A at 250 V conforming to IEC 60947-5-1 appendix C
Electrical Reliability	Λ = 10exp(-8) at 5 V and 1 mA with confidence level of 90 % conforming to IEC 60947-5-4
Signalling Type	Steady
Current Consumption	20 mA
Service Life	50000 h

Environment

Ambient Air Temperature For Storage	-40…70 °C
Ambient Air Temperature For Operation	-10…55 °C
Ip Degree Of Protection	IP65 conforming to IEC 60529
Standards	CSA C22.2 No 14 JIS C 852 JIS C 4520 IEC 60947-1 IEC 60947-5-1 UL 508
Product Certifications	CCC cURus
Vibration Resistance	1 mm (f= 5…55 Hz) conforming to IEC 60068-2-6 9 gn (f= 5…55 Hz) conforming to IEC 60068-2-6
Shock Resistance	20 gn (duration = 11 ms) for half sine wave acceleration conforming to IEC 60068-2-27
Electromagnetic Compatibility	Electrostatic discharge immunity test - test level: 8 kV conforming to IEC 61000-4-2

Contractual warranty

Warranty	18 months

Sustainability

Green Premium™ label is Schneider Electric's commitment to delivering products with best-in-class environmental performance. Green Premium promises compliance with the latest regulations, transparency on environmental impacts, as well as circular and low-CO_2 products.

Guide to assessing product sustainability is a white paper that clarifies global eco-label standards and how to interpret environmental declarations.

Learn more about Green Premium >

Guide to assess a product's sustainability >

Transparency RoHS/REACh

Well-being performance

- Reach Free Of Svhc
- Mercury Free
- Rohs Exemption Information — Yes

Certifications & Standards

Reach Regulation	REACh Declaration
Eu Rohs Directive	Pro-active compliance (Product out of EU RoHS legal scope)
China Rohs Regulation	China RoHS declaration
Environmental Disclosure	Product Environmental Profile
Weee	The product must be disposed on European Union markets following specific waste collection and never end up in rubbish bins
Circularity Profile	End of Life Information

Dimensions Drawings

Pushbutton

Square Head

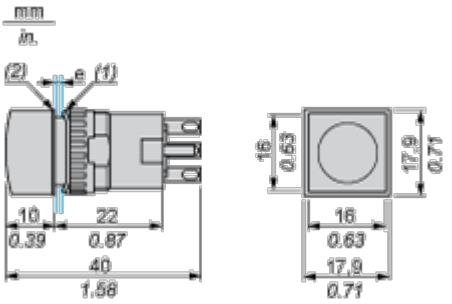

(1) Anti-rotation plate (thickness: 0.6 mm / 0.02 in.)

(2) Seal (thickness: 0.5 mm / 0.01 in.)

e panel thickness: 0.5 mm (0.01 in.) ≤ e ≤ 6 mm (0.24 in.)

Mounting and Clearance

Panel Cut-Out and Mounting
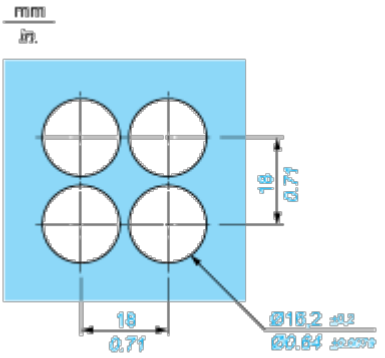
Circular or Square Head