Product datasheet

Specifications

Green Premium™

Illuminated monolithic push button, Harmony XB6E, square green flush, 16mm, spring return, 24V DC, 1CO

XB6ECW3B1P

Main

Range Of Product	Harmony XB6E
Product Or Component Type	Illuminated monolithic push-button
Device Short Name	XB6E
Bezel Material	Plastic
Mounting Diameter	16 mm
Sale Per Indivisible Quantity	5
Shape Of Signaling Unit Head	Square
Type Of Operator	spring return
Operator Profile	Green flush
Contacts Type And Composition	1 C/O
Contact Operation	Snap action
Connections - Terminals	Insulated faston, connection size: 2.8 x 0.5 mm Solder terminal, clamping capacity: <= 0.75 mm² AWG 19 Fast connector socket
Contacts Material	Gold-flashed silver
Light Source	Integral LED
[Us] Rated Supply Voltage	24 V DC polarised

Complementary

Net Weight	0.006 kg
Operating Position	Any position
Marking	CE
Mechanical Durability	1000000 cycles
Contact Resistance	50 mOhm at 1/6 V
Short-Circuit Protection	2 A cartridge fuse type gG
[Ith] Conventional Free Air Thermal Current	3 A (fast connector socket) 5 A
[Ie] Rated Operational Current	1.5 A at 120 V, AC-12 conforming to IEC 60947-5-1 1 A at 240 V, AC-12 conforming to IEC 60947-5-1 1 A at 24 V, DC-12 conforming to IEC 60947-5-1 0.7 A at 24 V, DC-13 conforming to IEC 60947-5-1 0.2 A at 125 V, DC-12 conforming to IEC 60947-5-1 0.15 A at 125 V, DC-13 conforming to IEC 60947-5-1
Electrical Durability	100000 cycles, AC, 0.7 A at 220 V conforming to IEC 60947-5-1 appendix C
Signalling Type	Steady

Disclaimer: This documentation is not intended as a substitute for and is not to be used for determining suitability or reliability of these products for specific user applications

Current Consumption	10 mA
Service Life	30000 h

Environment

Ambient Air Temperature For Storage	-40…70 °C
Ambient Air Temperature For Operation	-10…55 °C
Ip Degree Of Protection	IP65 conforming to IEC 60529
Standards	CSA C22.2 No 14 UL 508 IEC 60947-1 JIS C 852 JIS C 4520 IEC 60947-5-1
Product Certifications	CCC cURus
Vibration Resistance	1 mm (f= 10…55 Hz) conforming to IEC 60068-2-6
Shock Resistance	10 gn (duration = 11 ms) for half sine wave acceleration conforming to IEC 60068-2-27

Packing Units

Unit Type Of Package 1	PCE
Number Of Units In Package 1	1
Package 1 Height	3 cm
Package 1 Width	9 cm
Package 1 Length	20 cm
Package 1 Weight	12 g
Unit Type Of Package 2	BAG
Number Of Units In Package 2	5
Package 2 Height	3 cm
Package 2 Width	9 cm
Package 2 Length	20 cm
Package 2 Weight	0.06 kg
Unit Type Of Package 3	S01
Number Of Units In Package 3	50
Package 3 Height	15 cm
Package 3 Width	15 cm
Package 3 Length	40 cm
Package 3 Weight	715 g

Contractual warranty

Warranty	18 months

Sustainability

Green Premium™ label is Schneider Electric's commitment to delivering products with best-in-class environmental performance. Green Premium promises compliance with the latest regulations, transparency on environmental impacts, as well as circular and low-CO_2 products.

Guide to assessing product sustainability is a white paper that clarifies global eco-label standards and how to interpret environmental declarations.

Learn more about Green Premium >

Guide to assess a product's sustainability >

Transparency RoHS/REACh

Well-being performance

- Reach Free Of Svhc
- Mercury Free
- Rohs Exemption Information — Yes

Certifications & Standards

Reach Regulation	REACh Declaration
Eu Rohs Directive	Pro-active compliance (Product out of EU RoHS legal scope)
China Rohs Regulation	China RoHS declaration
Environmental Disclosure	Product Environmental Profile
Weee	The product must be disposed on European Union markets following specific waste collection and never end up in rubbish bins
Circularity Profile	End of Life Information

Dimensions Drawings

Pushbutton

Square Head

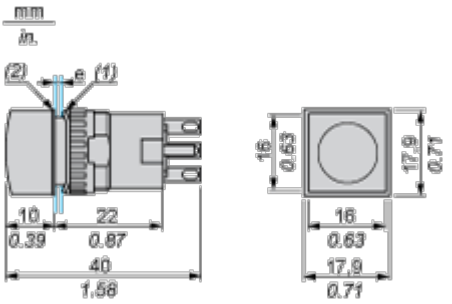

(1) Anti-rotation plate (thickness: 0.6 mm / 0.02 in.)

(2) Seal (thickness: 0.5 mm / 0.01 in.)

e panel thickness: 0.5 mm (0.01 in.) ≤ e ≤ 6 mm (0.24 in.)

Mounting and Clearance

Panel Cut-Out and Mounting
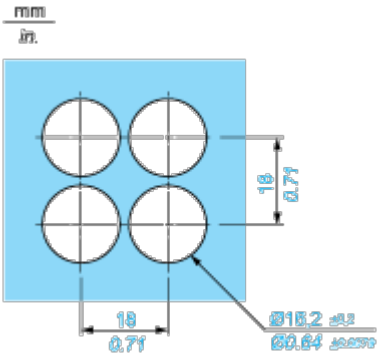
Circular or Square Head